Early Damage Detection of Structural Defects Using Guided Waves

M. BARTHOLMAI, E. KÖPPE and J. PRAGER

ABSTRACT

Limited access to the object of relevance is often an essential problem in testing routines, e.g. for non-destructive testing of industry facilities or components of means of transportation. The presented project is about the development of a non-destructive testing method for application over great distances (up to 100 m). The method is based on directed excitation and measuring of Lamb waves (guided waves). It enables an effective differentiation of structural and defective indications as well as a classification of different defect types.

The advantage of guided waves is the ability of propagation over great distances. This offers innovative possibilities for the investigation of large or difficult to access constructions. The testing method can be helpful in a broad variety of applications. It is useable for the characterization of plane or cylindrical, thin-walled surfaces of metal or fiber laminated materials. Particularly the investigation of aircraft wings and other aerospace components as well as the investigation of pipelines are addressed fields of application.

The project was based on BAM's established testing technology and know-how regarding ultrasound methods. During the project a comprehensive understanding was build up about the Lamb wave principles and application relevant parameters (specimen materials and dimensions, wave characteristics, excitation, transmission und reflection). Algorithms were developed to identify and analyze damage patterns (cracks, wholes, weakening).

Beside the algorithm processing the main project focus was on developing a capable equipment technology. Ultrasound multichannel technique was used as sensor elements. Very challenging demands consist on the excitation technology to generate the wave modes using piezoelectric actuators. Because there is no adequate existing solution available for this purpose, a new development was carried out. An innovative

Matthias, Bartholmai, Enrico, Köppe, Jens Prager
BAM Federal Institute of Materials Research and Testing
Unter den Eichen 87, 12205 Berlin, Germany
matthias.bartholmai@bam.de

wave generator was implemented, particularly for the multichannel use and configuration of different wave forms and modes. Synchronization, frequency adjustment and amplitude modulation for up to 16 channels are possible at very high frequencies.

The Specifications allow building up application oriented structural health monitoring (SHM) systems for the investigation of large-scale structures. Next steps are the validation and optimization of the system on suitable reference objects and the expansion of the actor techniques also for operating the sensors.

INTRODUCTION

For the inspection of vast structures testing methods using ultrasound waves (guided waves) gained in importance during the past years. Guided waves propagate in structural elements almost undamped over great distances. This allows the investigation of broad areas of the element from one sensor position, resulting in a reduction of efforts and cost. Main field of application at present is the inspection of pipelines. Additionally it offers a promising approach e.g. for the inspection of aviation components.

For pipeline investigation systems are used with a sensing distance up to 50 m in both directions, depending on the testing conditions. Currently such systems are used for the periodic inspection of gas and oil pipelines. Particularly in burried pipelines the advantages of testing with guided lamb waves becomes apparent. On the other hand it must be considered that this approach is not an analytical method but a detection method, what means that detecting of damage patterns is possible but a deeper analysis is not. With state of the art systems it is still difficult to determine the exact position, size and type of the flaw. In comparison to classic ultrasound methods the detection probability particularly of small flaws is slightly smaller.

In aerospace engineering guided waves are a promising approach for the investigation of highly stressed components. Especially the usage of innovative materials as fiber reinforced plastics, which have different damage patterns than metal components, demand for new testing methods. It could be an option to integrate (by laminating) sensor-actuator combinations as online surveillance systems directly in the component.

Main objective will be to establish the testing method using guided lamb waves for structural health monitoring and early damage detection. Not only is the detection of errors in a one-time testing routine addressed but the comprehensive monitoring of the components integrity using sequential (automated) test runs. This allows in detail investigation of the temporal development and change of the components behavior and delivers very sensitive information about necessary service actions and the remaining lifetime.

CHALLENGE

In contrast to classical ultrasound testing which uses mainly longitudinal and transversal waves, the excitation of guided waves can lead to different wave modes. Except for some exceptions the propagation of these modes is dispersive, i.e. the

propagation velocity is frequency dependent. Dispersion makes the data analysis more difficult and demands using of qualified algorithms. Narrow-band, mode selective excitation methods can reduce but not avoid the influence of dispersion. The development of an appropriate excitation and sensing technics is of vital importance.

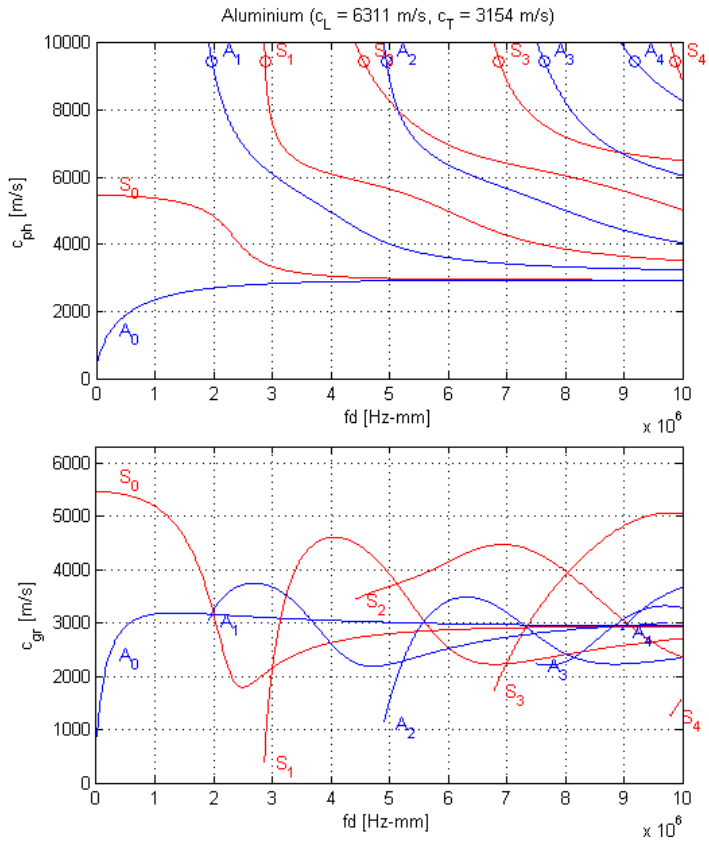

Figure 1. Phase and group velocity of the first few Lamb modes on an aluminium plate.

Figure 1 shows the dispersion behavior of an aluminum plate. At a distinct frequency-thickness product fd two or more symmetrical and asymmetrical wave modes can propagate according to the Raleigh Lamb Equation [1]. The modes have different phase velocities and group velocities. Additionally, the normal and in plane components of the particle displacement vary with fd, which is not obvious from the diagrams.

The dispersion causes to a broadening of the excited wave signal which results in difficulties determining the receiving times of the reflected signal at the sensor depending on the frequency. Additionally the amplitude decreases which leads to a decreased signal-noise ratio. For an arbitrary excitation different wave modes are excited in the structure. When hitting a structural inhomogeneity (change of geometry or material, corrosion, crack, etc.) the modes are reflected and additional mode conversion can appear. The reflected signal is a superposition of the reflections and the mode conversions of all excited modes. Hence, it can be expected that reflected signals are much more complex than excited ones. Even if only one selected mode is generated the echo signal can contain several modes with different propagation velocities. Thus, it is crucial to develop and validate a testing method with an

appropriate single mode excitation and to implement analyzing strategies that extract all important information from the reflected signal.

SIGNAL EXCITATION

To overcome the difficulties of a multi-mode conglomerate, a selective excitation of a certain mode is required. Thus, only one wavefront impinges at the discontinuity and produces reflections and mode conversions. Looking at the curves, shown in Figure 1, it becomes obvious, that the frequency selective excitation at a given fd has to be complemented by a phase velocity selection to obtain a mode selective excitation. To provide this, a wave length dependent excitation is required.

Piezoelectric transducers are established as actuators and sensors for ultrasound wave methods. As the piezoelectric effect is reversible, the actuator can also act as sensor for measuring the reflected signal. For plate structures a selective mode excitation can be generated using interdigital transducers or angle probes. Using the principle shown in Figure 2, the phased array technique can be adapted to apply a normal force pattern on the surface of the structure [2]. Depending on the swivel angle α, electronically controlled by the delay times of the phased array system, and on the wedge angle, the wave front impinges to the base of the wedge with the angle β. Therewith, a normal force pattern with a trace wavelength λ_s is generated at the surface of the structure, forcing the selective excitation of a mode with the phase velocity $c_{ph} = f \cdot \lambda_s$.

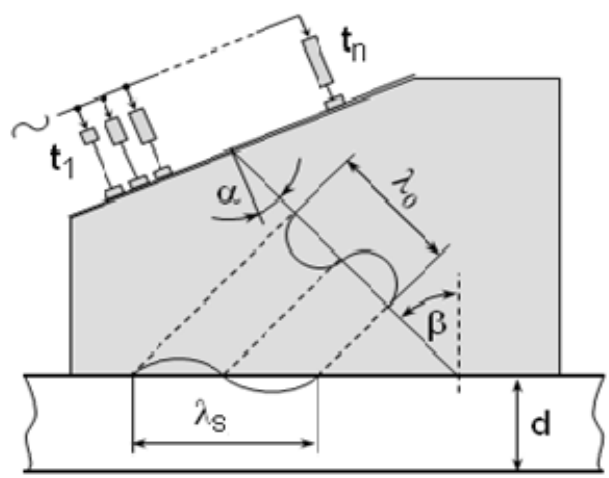

Figure 2. Phased array transducer for selective mode excitation.

The presented excitation principle is also applicable without a wedge. Therefor the single transducers must be operated in the way that the required excitation pattern is adjusted on the surface of the structure. Adaption to curved components is only possible using an aligned probe base. For the application on pipelines or cylindrical components special array transducers can be used. Figure 3 shows such an array probe, with equally applied transducers around its perimeter.

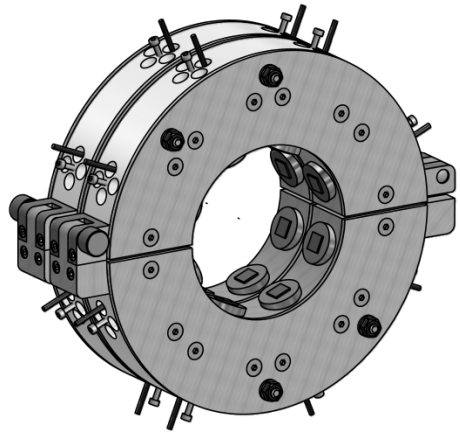

Figure 3. Array probe for excitation of lamb waves in pipelines.

Classic ultrasound methods use very short dirac impulses, which cause a broadband excitation. Contrary to this, for the generation of guided waves, narrow-band, mode selective excitation is required. This can be accomplished using sinus burst signals. Thus voltage amplitudes ≥ 100 V are needed to operate the transducers. This allows adequate signal amplitudes in the material with a sufficient signal-noise ratio. A multi-channel design of actuators and sensors is required to attain the phase shift, which is the basis for guided lamb wave excitation.

HARDWARE DEVELOPMENT

In the scope of a project to enhance the guided wave method for SHM BAM's divisions "Acoustical and Electromagnetic Methods" and "Sensors, Measurement and Testing Methods" cooperate to develop an innovative electronic device for multi-channel excitation and sensing of guided lamb waves.

Figure 4. 16-channel excitation and sensing device.

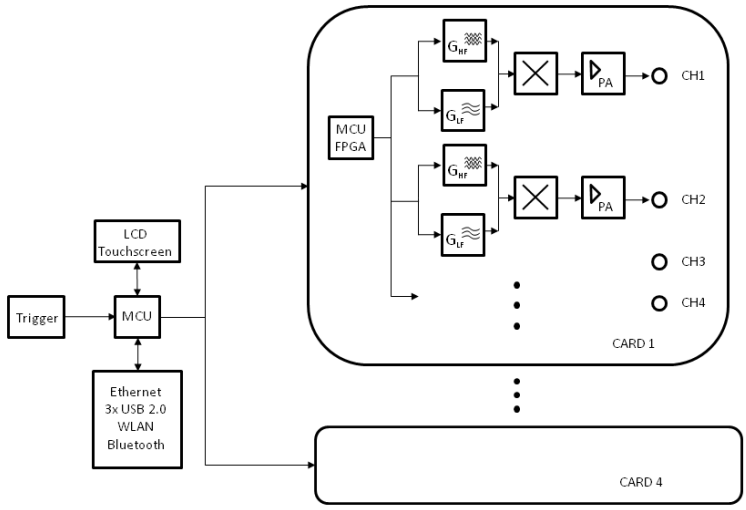

Figure 5. block diagram of the device.

Figure 4 shows the hardware device, developed for the SHM application with guided lamb waves. Its block diagram is displayed in Figure 5. The excitation unit is composed in 16 channels, divided into 4 channels on 4 boards, and based on DDS (direct digital synthesis) signal generators. An enveloped sinus signal is created by the CPU and loaded into the DDS generators. Synchronisation of the base signal and phase shift are controlled by the CPU. Integrated power operational amplifiers with a high slew rate amplify the signal to operate the piezoelectric transducers with amplitude of up to ±100 V. The output signal is shown schematically in figure 6.

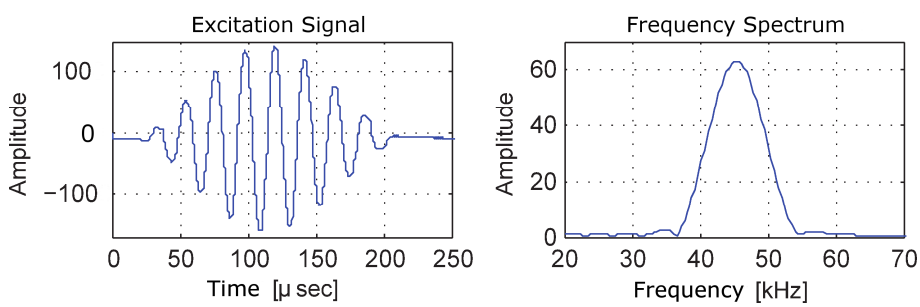

Figure 6. schematic output signal.

The system operates each actuator with an adjustable enveloped sinus signal. The base signal can be set up in the range between 50 kHz and 2.5 MHz, and the according envelope in the range between 1 and 150 kHz. The excitation amplitude can be controlled in the range between ±10 and ±100 V using a power of up to 300 W per channel. Consequently for generation of guided lamb waves each single excitation channel can be set up individually in base frequency, envelope frequency and amplitude, according to the actuator characteristics, while time synchronisation is given in relation to channel 1. A generated output signal is shown in figure 7.

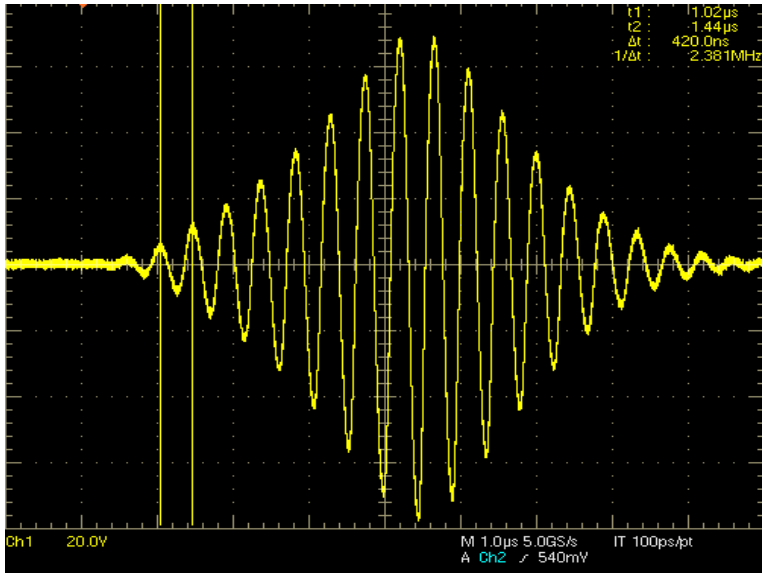

Figure 7. real output signal with an amplitude of ±75 V, a base frequency of 2.38 MHz and an envelope frequency of 120 kHz.

After decay of the excitation signal, the piezo-transducers are operated as sensors. In contrast to the excitation the sensing works via a single channel and is sequentially multiplexed to all channels of the same card. Thus, to fill the receiving vector completely, 4 measurements must be performed. This operating process is enabled by the time variance of the configuration and settles a compromise between hardware complexity and measuring time. The connection to a computer can be provided by the typical interfaces (USB, LAN or WLAN), which transfers both the operating and the sensing data. The firmware is based on a linux kernel.

SUMMARY AND OUTLOOK

Using guided waves for testing of components and structures offers new possibilities to investigate their integrity, e.g. of large scale structures with limited access. The method can be used for damage detection as well as permanent SHM. It is challenging to implement and establish the method:

- The physical basics of ultrasound wave propagation are complex and using guided waves requires great effort in the signal excitation and analysis of the measured echo-signals, compared to the conventional ultrasound method.
- Dispersion and wave propagation in different modes must be taken into account.
- A multi-channel testing device is necessary. Not only the time structure of reflected signals must be interpreted, but analysis of the wave number spectrum delivers information about the reflected mode composition.

The paper presents a promising approach to address these challenges in the scope of a project carried out at BAM. Next steps are the validation and optimization of the

system on suitable reference objects. In the future the method should be further enhanced. It is probable that SHM gains in importance to increase the safety of technical components and structures. Also the prolongation of service- and life-time is an important economical aspect. Enhancement in complexity and miniaturization of electronic components accelerate this trend. High performance systems for SHM become possible in mobile applicable or even integrated form. Ultrasound testing, particularly using guided waves can further profit from these developments.

REFERENCES

1. J. L. Rose: Ultrasonic Waves in Solid Media. Cambridge University Press, Cambridge 1999.
2. J. Prager, C. Hoever, G. Brekow, M. Kreutzbruck: Flaw Detection wit Guided Waves Using Phased Array Technique. 10. ECNDT (Tagungsband), Moskau 2010.